Z- Axis Mounting Bracket

FOR VERTICAL MOUNT OF M-511, M-521 AND M-531 STAGES

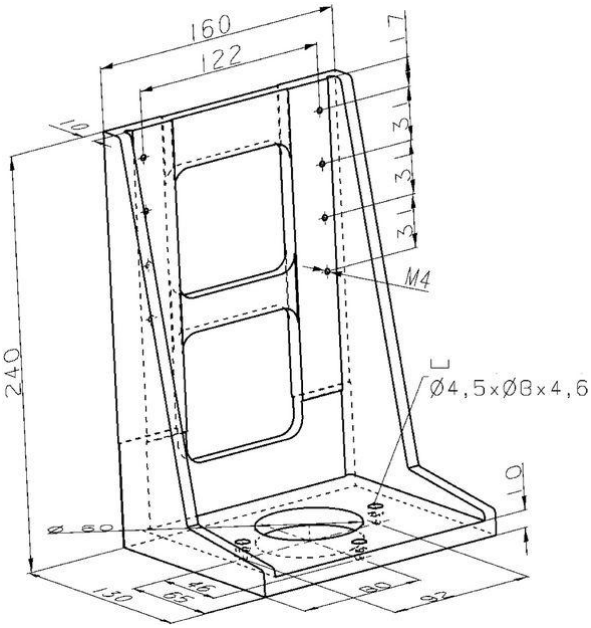

M-592.10

Order Information

M-592.10
Mounting Bracket for Vertical Mount of M-511, M-521 and M-531 Stages
Ask about custom designs!

Related Products

M-511 • M-521 • M-531 High- Precision Linear Translation Stage

© Physik Instrumente (PI) GmbH und Co. KG 2014. Subject to change without notice.
Latest releases available at www.pi.ws

© Physik Instrumente (PI) GmbH und Co. KG 2014. Subject to change without notice.
Latest releases available at www.pi.ws